SPEED BUMPS

Manufactured From

Recycled Plastics

MADE IN U. S. A.

- **Virtually Indestructible**
- **Easy Installation**
- **UV Stabilized**
- **Maintenance Free**
- **Light Weight - Yet Stable**
- **Chemical Resistant**
- **Weather Resistant**
- **100% Recycled Material**
- **Lifetime Warranty**

Item Number	Wt.	Holes	Description
4 Foot Speed Bump	14	3	2"Hx10"Wx4'L Speed Bump w/Channels-Yellow
6 Foot Speed Bump	23	4	2"Hx10"Wx6'L Speed Bump w/Channels-Yellow
8 Foot Speed Bump	31	4	2"Hx10"Wx8'L Speed Bump w/Channels-Yellow
10 Foot Speed Bump	43	5	2"Hx10"Wx10'L Speed Bump w/Channels-Yellow
12 Foot Speed Bump	52	6	2"Hx10"Wx12'L Speed Bump w/Channels-Yellow
2 Endcaps	8	2	2"Hx10"Wx1'L Speed Bump End Cap-**PAIR**

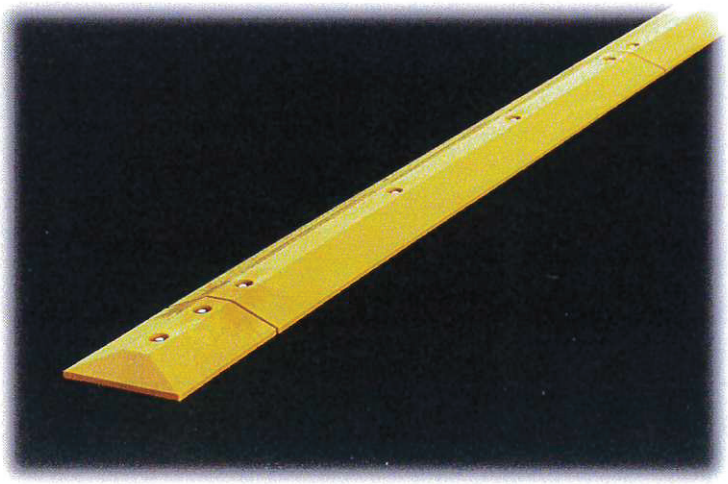

6’ Recycled Plastic Speed Bump

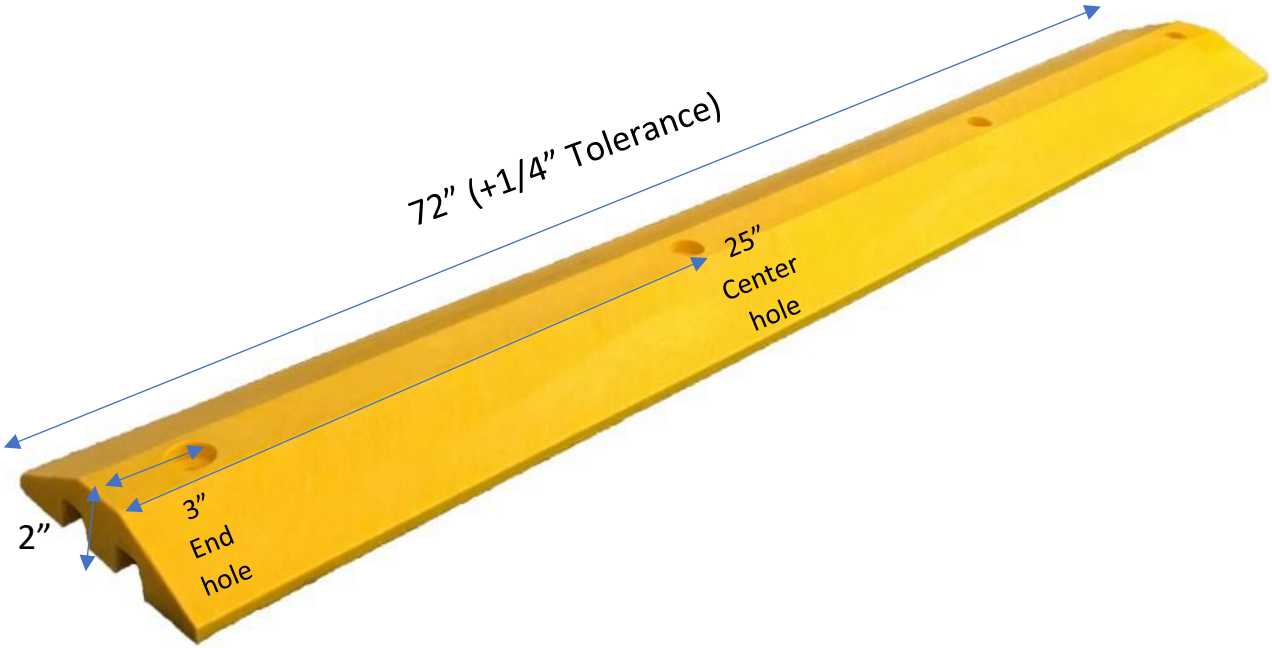

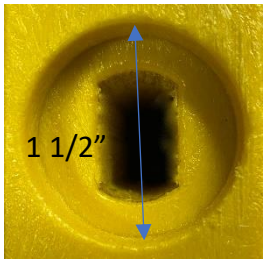

½” Countersunk Molded Hardware Hole
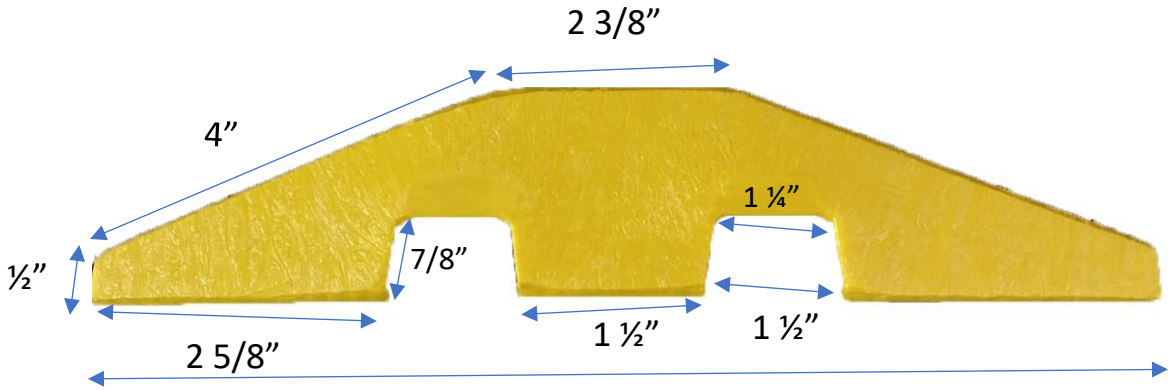
1” x ½” Oblong Hardware Opening